FCM Node - Pars ECO MUX	ISACO	1101032

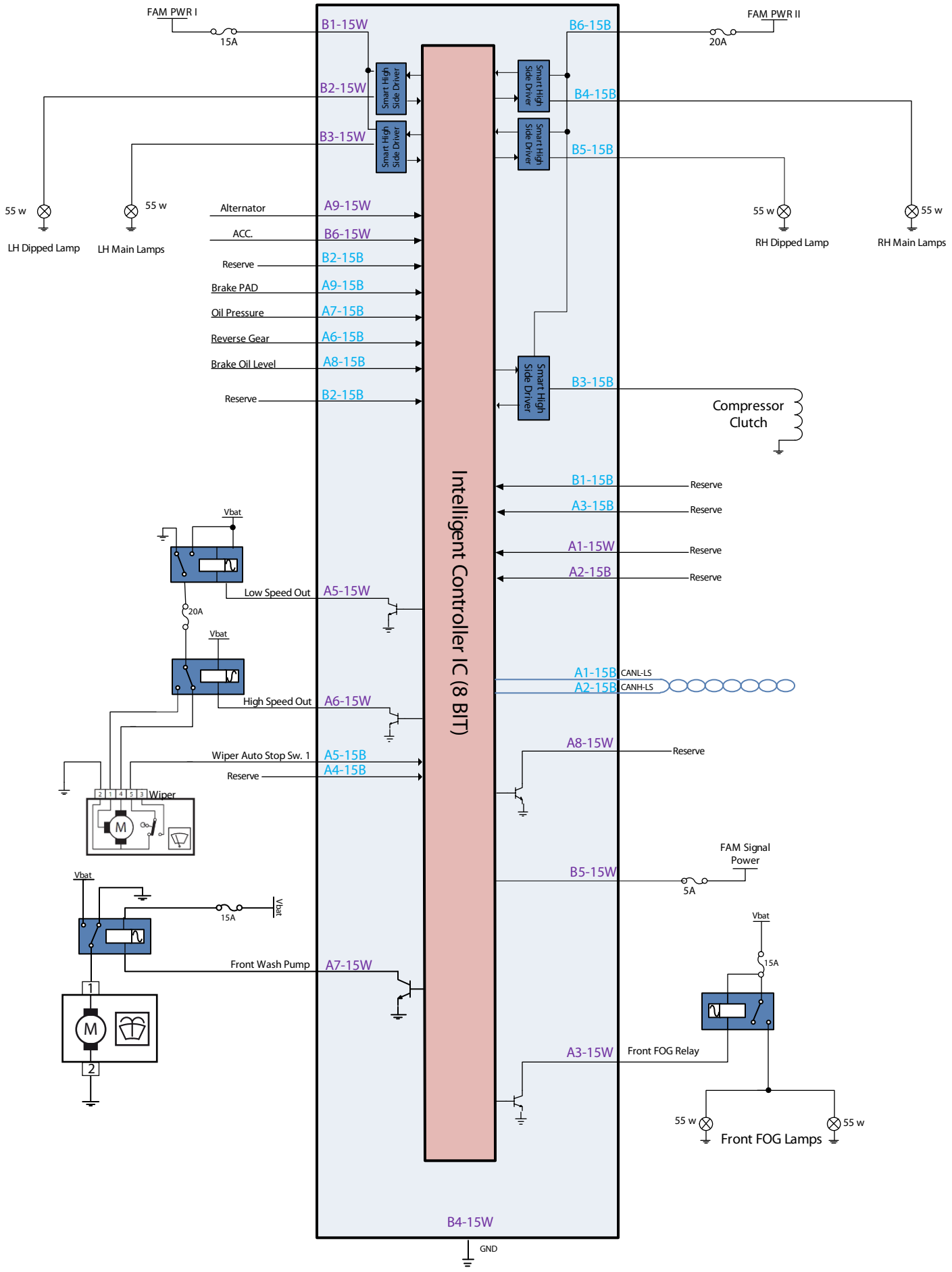

Connector 15 Pin White (98315--0010)

Connector 15 Pin Black (98315-0001)

Drawn by: Engineering Dep. of ISACO	2015.07.07