FCM - P6L (SD) & Runna & Dena ECO MUX ISACO	1101006

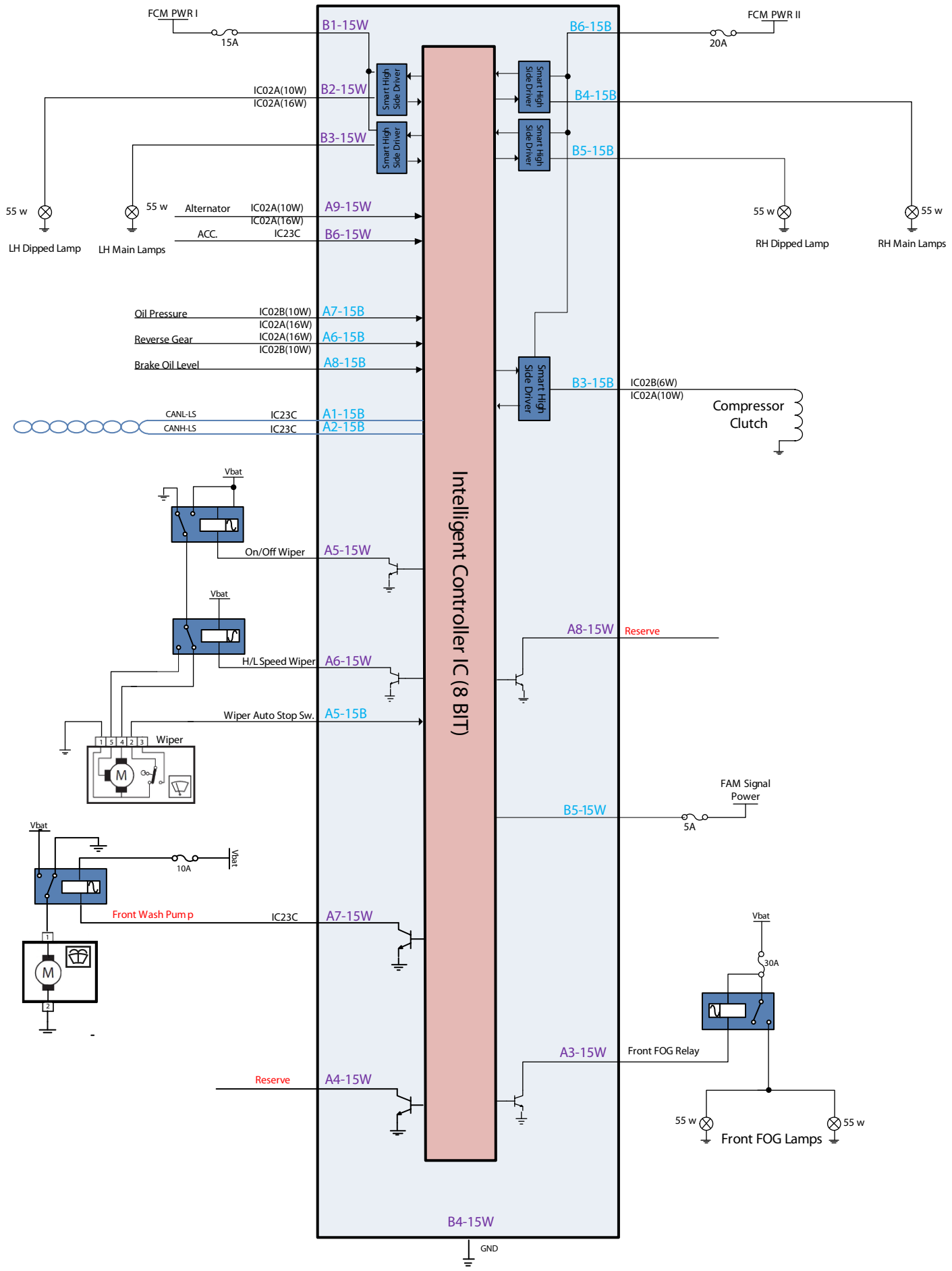

Connector 15 Pin White (98315--0010)

Connector 15 Pin Black (98315-0001)

Drawn by: Engineering Dep. of ISACO	2016/01/01